ISO 9001:2008
Cert.-No. 01 100 89747

ISO 14001:2004
Cert.-No. 01 104 069609

Metall- und Plastikverarbeitungs- GmbH & Co. KG Kierspe

Internet: www.mpk-kierspe.de

Fitting and Operating Instructions

GB

Rooflight Model 28, 32, 40

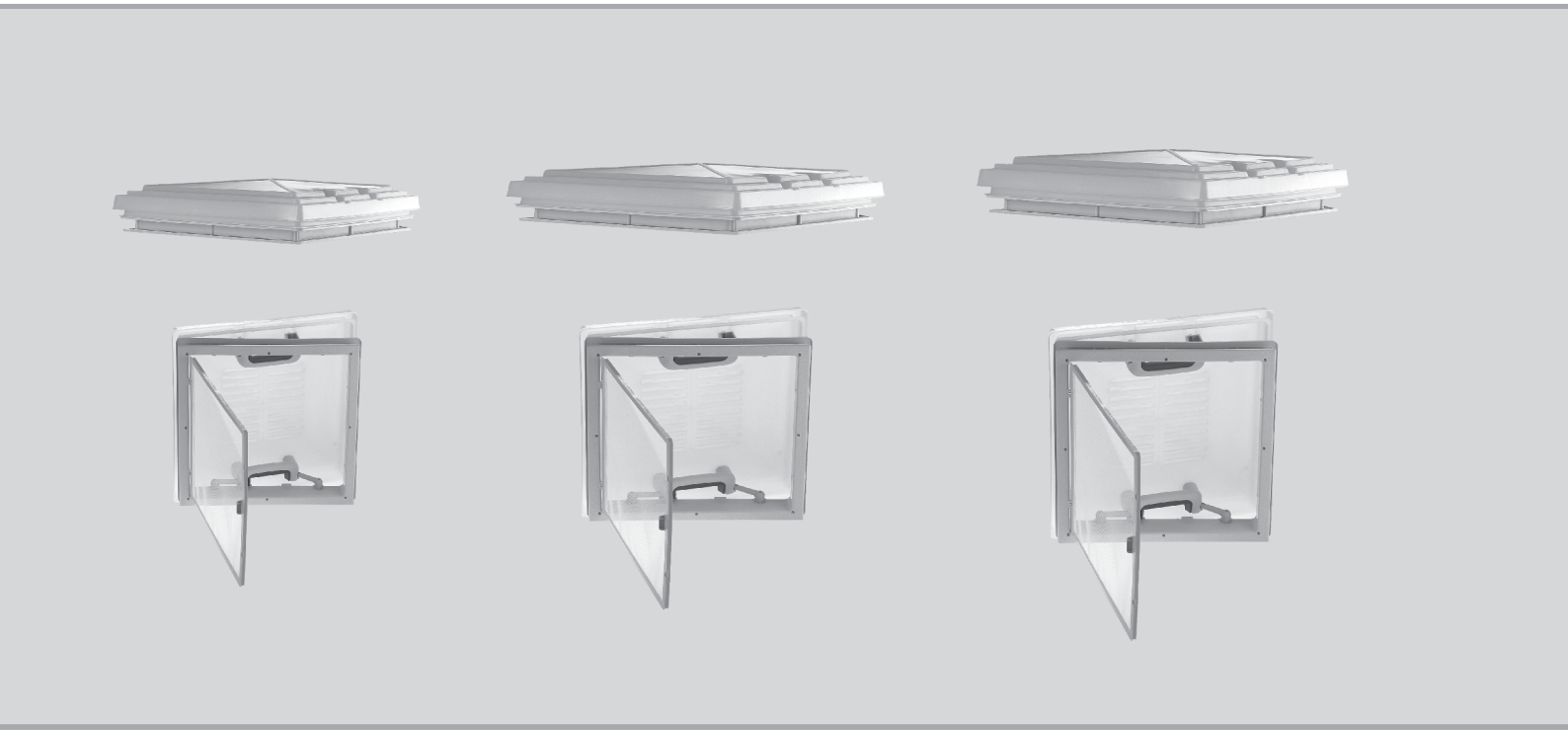

Issue May 2011

We reserve the right to change technical specifications without notice. E&OE

Illustration

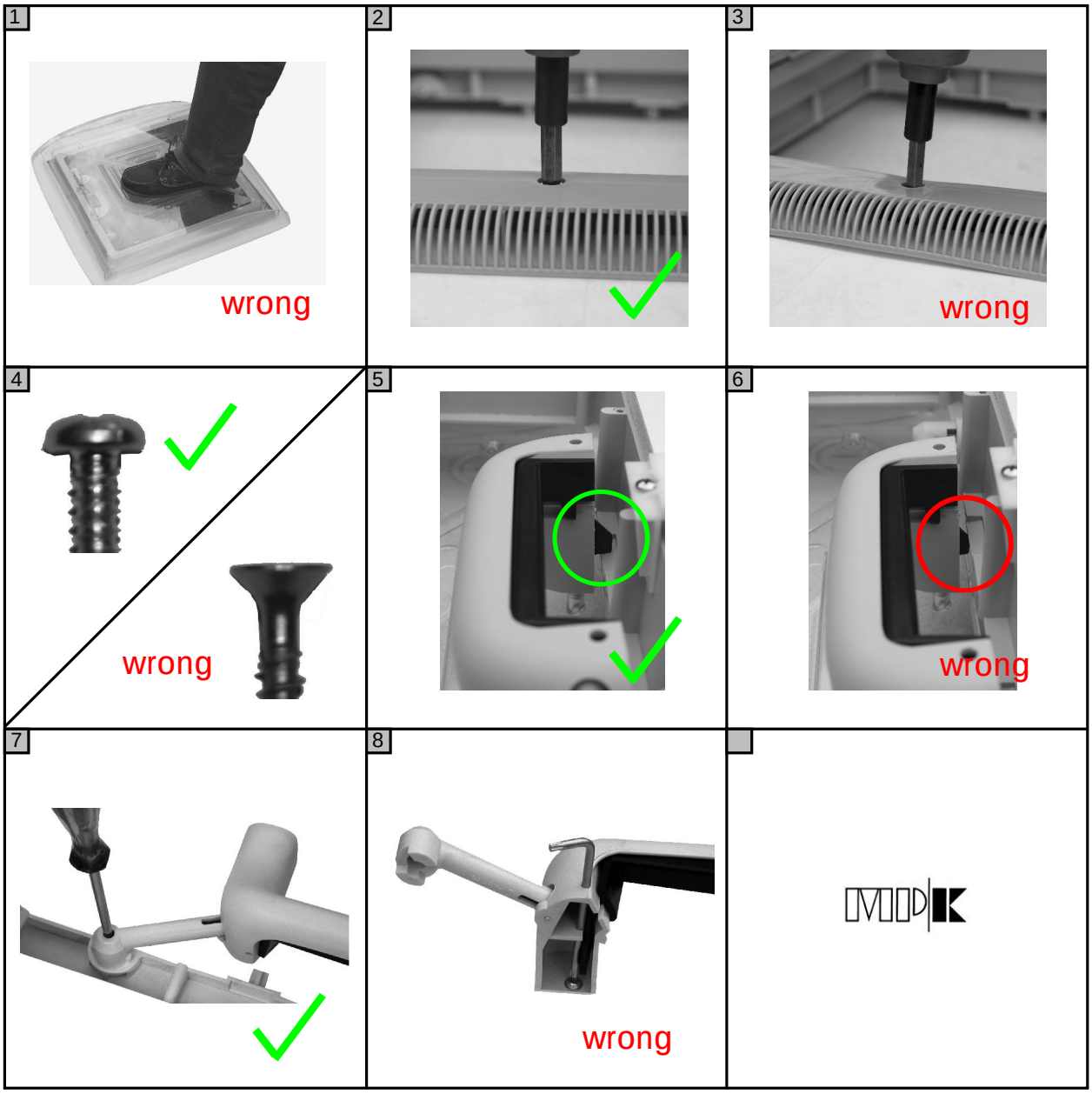

We only recommend installation by authorised dealers.

Please read these instructions carefully before fitting and operating the rooflights.

Important: We cannot be held responsible for incorrect fitting, handling or operation.

Any product faults relating to the production and materials used should be notified to us via an authorised dealer immediately.

Fitting Instructions

Warning!	Never stand on the dome of the rooflight! (See picture 1)
Fitting position	Choose a fitting position that will not interfere with other roof mounted components (e.g. roof-racks/antenna's etc.) and avoid internally installed electrical cables and furniture, which could impede the correct operation of the rooflight. The rooflight should only be fitted to a flat roof surface, both internally and externally.
Aperture size	Depending on rooflight model (see technical data page 6 - 7).
Roof thickness	Ensure the correct rooflight is selected for the roof thickness (for available size options see page 6).
Fitting direction	Rooflights must only be fitted with the operating handles facing the front and rear of the vehicle, not across the vehicle.
Fitting screws	The length of the screw should be determined by the roof thickness, plus approximately 10 mm tor the screw to enter the upper frame. Secure only with pan, or round headed screws (not supplied), 3,5 mm/ head according to DIN ISO 7049 (DIN 7981). Do not use countersunk screws as they will damage the rooflight frame .(See picture 4).
Sealing	Use only long term flexible sealant, suitable for external use, (not supplied), and also suitable for the material of the upper frame. Consult your sealant supplier.
Fitting	Before fitting the rooflight remove the profiles covering the flynet and blind rollers. These are temporarily/partially fitted into place when new. PLEASE NOTE: When fully fitted these profiles cannot be removed without being damaged. It is therefore important to make sure the rooflight is fitted and operates correctly, before fully installing the profiles. Correctly align the upper and lower frames and secure evenly with the screws. Do not over-tighten as this may damage the frame, or affect the correct operation of the rooflight. If the inner frame starts to distort, the correct torque has been reached (See picture 2-3). Screws not supplied!

Operation Instruction

Instruction for use

The rooflight can be opened fully, or in four different directions, so that the dome can be angled against driving weather conditions. To open squeeze the locks (optional) into the handles and push open.

To open and close pull the flynet slightly into inner direction until it slides beside the flynet click. Do not open more than 90°, to avoid damaging the hinges. Do not over-bend as this may break the flynet frame.

Free-air-flow

When closed there is a free airflow through the rooflight, which must be kept free at all times (see technical data page 6-7).
Never close the openings of the free-air-flow.

Before driving

IMPORTANT: All rooflights must be closed and locked down before travelling. (See picture 5-6)

Care Instructions

Cleaning

The rooflight should only be washed by hand, using a sponge with plenty of clean water to avoid scratching. Caustic detergents and solvents may attack the plastic and make it brittle or disintegrate.

For easier cleaning of the dome it can be removed from the frame by releasing the four screws holding the handle arms. (Models from May 2010, Trox TK10 screws) (See picture 7)

Make sure that only the original screws are used when replacing the dome and that they enter the thread in the plastic correctly. Do not over-tighten

Never remove the screws holding the dome and the handles together (See picture 8). These are secured by a torque screwdriver and should only be handled by an approved dealer.

Remove the flynet. The flynet is hanged in and it is removed by first opening fully and hanging out from the frame. Reverse the process to install.

Attention: To avoid damage, do not bend the flynet frame. Clean the flynet mesh only with clean water too.

Technical Information

Product description

- Opaque rooflight with free airflow
- Spring assisted mechanism, flipable into four different directions, with locks
- Concealed fixing screws
- Removable flynet, optional roller blind
- ECE R43 Whole Vehicle Type Approved
(Please ask for further details.)

Technical Data:

Dome/ outer frame material:	Polypropylene
Model 28	
Aperture:	280 x 280 mm
Size dome:	330 x 330 mm
Free-air-flow:	60 cm²
Height over roof:	78 mm
Model 32	
Aperture:	320 x 360 mm
Size dome:	380 x 420 mm
Free-air-flow:	120 cm²
Height over roof:	83 mm
Model 40	
Aperture:	400 x 400 mm
Size dome:	480 x 480 mm
Free-air-flow:	30 cm² / 150 cm²
Height over roof:	91 mm

Technical Information

Model Options:

Model 28

Not available anymore, has been replaced by rooflight model 29.

Model 32

white	grey	beige	roller	net	roof thickness	air-flow	weight
---	---	320VB	---	---	24-46 mm	120 cm²	1350 g.
---	---	320VNB	---	X	24-46 mm	120 cm²	1400 g.

Model 40

white	grey	beige	roller	net	roof thickness	air-flow	weight
400VAW	---	400VB	---	---	24-46 mm	150 cm²	1700 g.
400VNAW	---	400VNB	---	X	24-46 mm	150 cm²	1750 g.
---	---	401VB	---	---	32-55 mm	150 cm²	1780 g.
---	---	401VNB	---	X	32-55 mm	150 cm²	1830 g.
---	---	403VB	---	---	56-89 mm	150 cm²	1850 g.
---	---	403VNB	---	X	56-89 mm	150 cm²	1900 g.
400VAW-3	---	400VB-3	---	---	24-46 mm	30 cm²	1700 g.
400VNAW-3	---	400VNB-3	---	X	24-46 mm	30 cm²	1750 g.
---	---	401VB-3	---	---	32-55 mm	30 cm²	1780 g.
---	---	401VNB-3	---	X	32-55 mm	30 cm²	1830 g.
---	---	403VB-3	---	---	56-89 mm	30 cm²	1850 g.
---	---	403VNB-3	---	X	56-89 mm	30 cm²	1900 g.

Spare parts

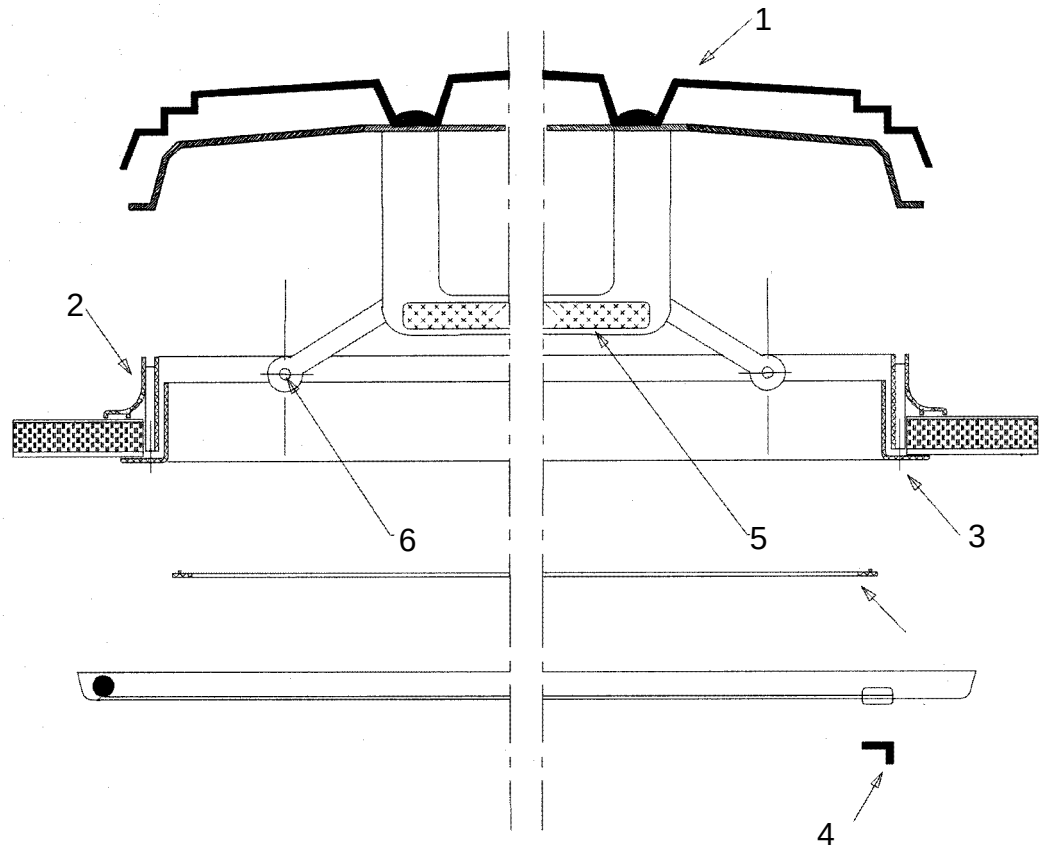

Nr.	Spare parts	beige	Colour frame: white	grey
1a	Replacement dome model 28	290.52VB	290.52VAW	290.52VG
1b	Replacement dome model 32	320.52VB	----------	----------
1c	Replacement dome model 40			
	150 cm³ air-flow	420.52VB	420.52VAW	420.52VG
	30 cm³ air-flow	420.52 VB-3	420.52VW-3	420.52VG-3
2a	Outer frame model 28	280.22B	280.22AW	280.22G
2b	Outer frame model 32	320.22B	----------	----------
2c	Outer frame model 40/401	400.21B	400.21AW	400.21G
	Outer frame model 403	400.23B	----------	----------
3a	Inner frame model 28	280.21B	280.21AW	280.21G
3b	Inner frame model 32	320.21B	----------	----------
3c	Inner frame model 40	400.22B	400.22AW	400.22G
	Inner frame model 401/403	401.22B	----------	----------
4	Handle for replacement-roller	450.3B	----------	----------
5	Locks: 1 set supplied in polybag with hanger, single packed			
	For rooflight model 28	270.99S	270.99S	270.99S
	For rooflight models 32,40-403	420.99S	420.99S	420.99S
6	Screws for handles	8000.4	8000.4	8000.4